S2 ME

TED (10) – 1017 A

(REVISION — 2010)

Reg. No. .....

Signature .....

SECOND SEMESTER DIPLOMA EXAMINATION IN ENGINEERING/ TECHNOLOGY — MARCH, 2015

ENGINEERING GRAPHICS

(Common except DCP and CABM)

[*Time* : 3 hours

(Maximum marks : 100)

[*Note* :—1. A2 size drawing sheet to be supplied.

2. All drawing should be in first angle projections.

3. Dimensioning as per BIS.

4. Sketches are accompanied.]

PART—A

(Maximum marks : 10)

Marks

I Answer all questions in one or two sentences. Each question carries 2 marks.

1. What is Engineering Graphics ?
2. Define Rhombus.
3. What is focal sphere ?
4. Differentiate between Isometric projection and Oblique projection.
5. What is mean by Profile Plane ? (5×2=10)

PART—B

(Maximum marks : 50)

(Answer *any five* of the following questions. Each question carries 10 marks.)

II Read the dimentioned drawing shown in Fig.1. Redraw the figure and dimension it as per BIS.

III Inscribe a regular heptagon in a circle, if the length of one side of heptagon is 20mm.

IV Draw an ellipse by concentric circle method. Give the major and minor axes as 100mm and 60mm respectively.

V Draw the projections of following points in same reference line.

(a) Point P is in H.P. and 30mm in front of VP.

(b) Point Q is in V.P and 35mm below H.P.

(c) Point R is in both H.P and V.P.

(d) Point S is in the H.P. and 35mm behind V.P.

(e) Point T is in the V.P. and 30mm above H.P.

Marks

VI The length of the top view of a line parallel to V.P. and inclined at 45° to H.P. is 50mm. One end of the line is 12mm above H.P. and 25mm in front of V.P. Draw the projections of the line and determine its true length.

VII Fig. 2 shows two views of a tray made from G.I. sheet. Draw its development.

VIII Isometric view of a forked end is shown in Fig. 3. Draw to scale the front view looking in the direction of F and an auxiliary view of the slant surface. (5×10=50)

PART—C

(Maximum marks : 40)

(Answer *any two* of the following questions. Each question carries 20 marks.)

IX Isometric view of a shaft end support is shown in Fig. 4. Draw the three views of the support.

X Fig. 5 shows pictorial view of an object. Draw the following views :

(i) Sectional view in the direction of F.

(ii) Side view from the right.

(iii) Top view.

XI Draw the Isometric view of the object shown in Fig. 6. (2×20=40)

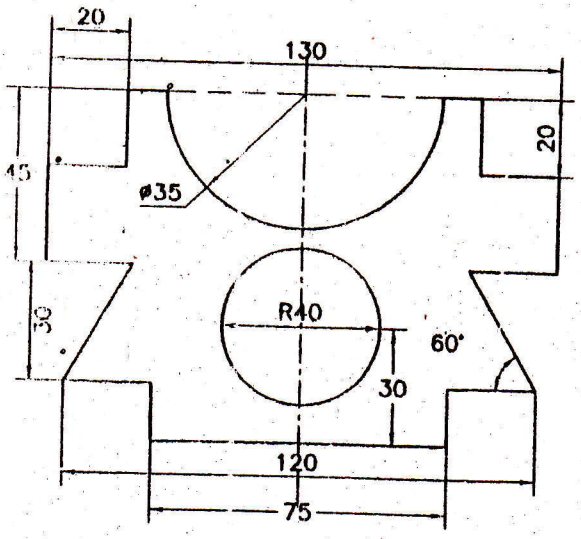

Fig - 1

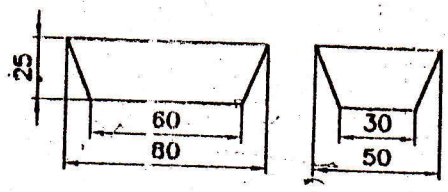

Fig. 2

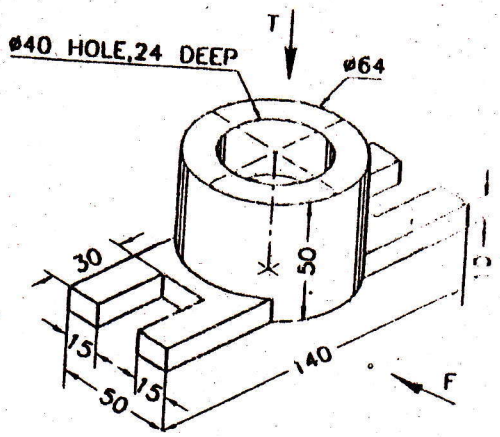

Fig. 4

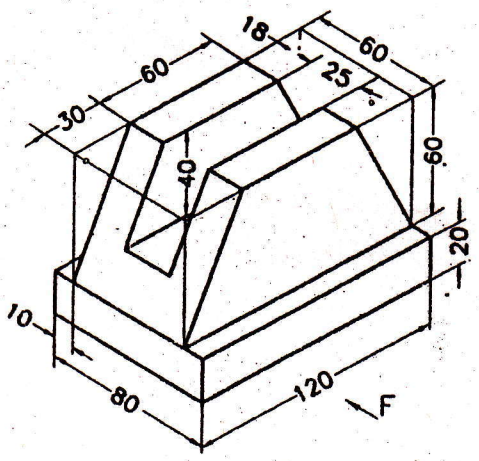

Fig - 3

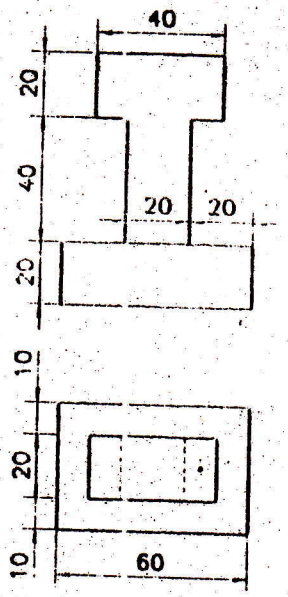

Fig - 6

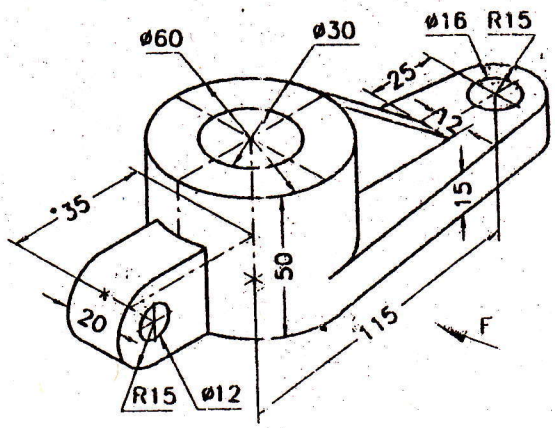

Fig - 5